Trio GENERATOR

Cummins

MADE IN TURKEY

DATAKOM

D-500-LITE

INTERNET ENABLED GENSET CONTROLLER

International Organization for Standardization ISO 14001:2015

ISO 9001

OUTPUT VALUES

Standby Power	Voltage	230/400
Standby Power	kVA	110
Standby Power	kW	88
Standby Power	Amper	158
Prime Power	Voltage	230/400
Prime Power	kVA	100

Prime Power	kW	80
Prime Power	Amper	144

DIESEL ENGINE

Brand	CUMMINS
Model	6BTA5.9G5
Max. Total Output Pow. (kWm/hp)	92/123
Cylinder Displacement (lt)	5.9
Cylinder Orientation	6 Single Line
Bore x Stroke(mm*mm)	102 X 120
Compression Ratio	17.3:1
Governor Type	Electronic
Rotation	1500 RPM
Aspiration System	Natural
Injection	Direct
Cooling System	Water Cooled
Electrical System(V DC)	24
Oil Capacity (lt)	16
Engine Coolant Capacity (lt)	11
Fuel Cons. %50 (lt/h)	9
Fuel Cons. %75 (lt/h)	18
Fuel Cons. %100 (lt/h)	26

ALTERNATOR

Standby Power (kVa/kw)	110/88
Prime Power (kVa/kw)	100/80
Brand	LEROY SOMER
Output Voltage (V)	231/400
Frequency (Hz)	50
Stationary Vol. Regulation(±)	0,01
Short Circuit Current	%300 (10 sec)
Insulation	H
Protection	IP23
E ciency (%)	92
Overloading	110% for 1 hour
Power Factor (cos Q=0.8)	0,8
Tot. Harmonic Dist. Rate	<1 %
Connection Type	Star
Number of Pole	4
Number of Bearing	Single

DIMENSIONS & WEIGHT

Without Canopy	Width	1100 mm
Without Canopy	Length	2500 mm
Without Canopy	High	1650 mm
Without Canopy	Weight	1200 kg
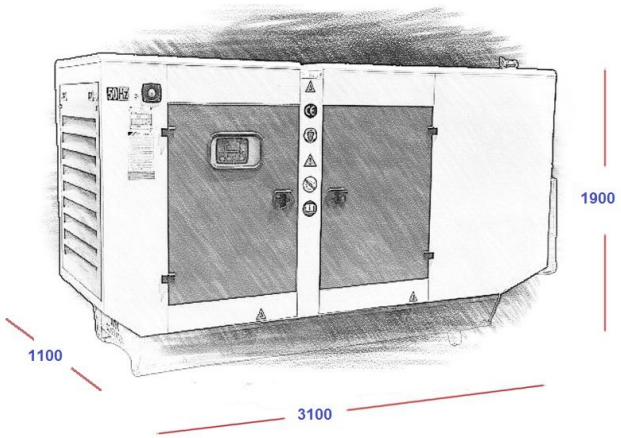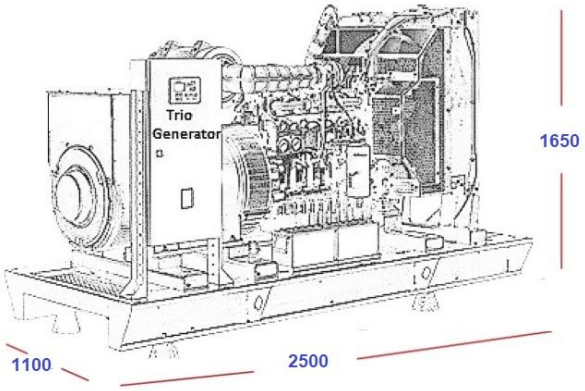
Without Canopy	Fuel Tank Capacity	280 lt
With Canopy	Width	1100 mm
With Canopy	Length	3100 mm
With Canopy	High	1900 mm
With Canopy	Weight	1400 kg
With Canopy	Fuel Tank Capacity	280 lt